USER MANUAL

FOLDING ALUMINIUM GANTRY CRANES MOVABLE UNDER LOAD


1000 KG

SUMMARY

INTRODUCTION

Before use, carefully read and follow the instructions in the user guide.
Always keep the user guide near the equipment, available to the operator and the person in charge of maintenance
This note contains information important for a safe, economic and effective use of the gantry crane.
The product and its technical characteristics are described there, the procedures of assembly of the material are enumerated and the good gestures of use are listed.

Technical specifications:

Présentation

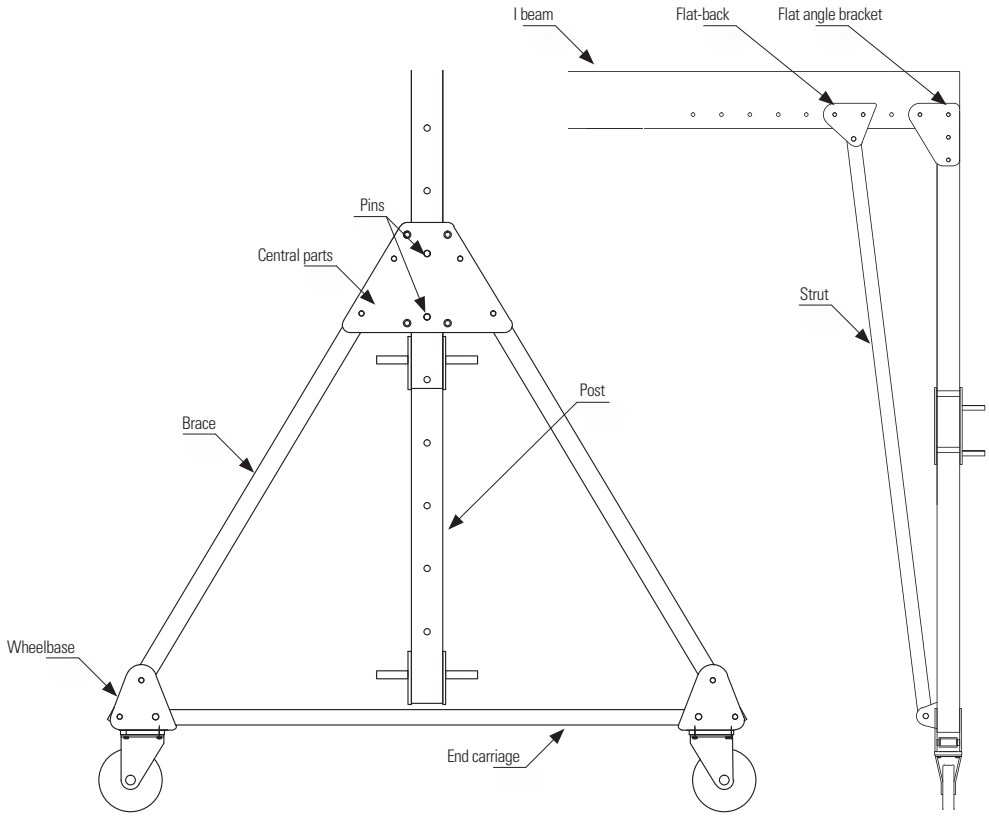

SPAN AND HEIGHT

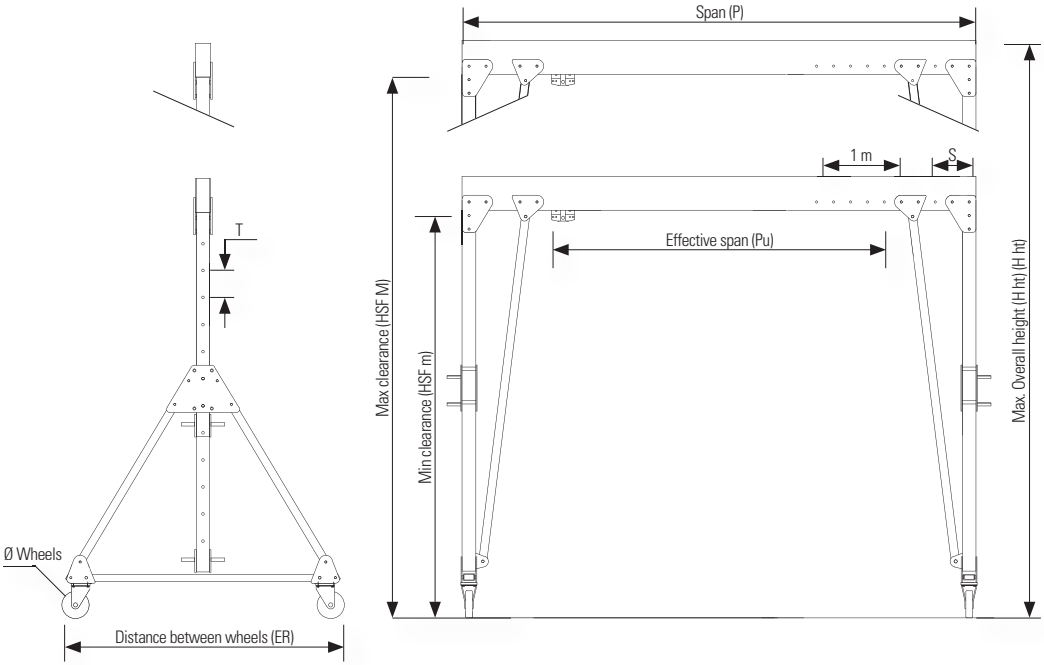

Gamme / Cotes	HSF mini (mm)	HSF maxi	T (mm)	S (mm)	ER (mm)
H0	1550	2150	150	125	1100
H1	2150	3200	150	125	1520
H2	3000	4000	200	125	2050

Span P (m)	2	2.5	3	3.5	4	4.5	5	5.5	6	6.5
Effective span Pu (m)	0.8	1.3	1.8	2.3	2.8	3.3	3.8	4.3	4.8	5.3

SAFETY INSTRUCTIONS

To ensure proper use of the product, it should observe the following

Assembly/Disassembly

- At each gantry assembly, ensure the rigidity of the structure and the tightening of fixing points of the unit.
- Carefully follow the instructions mentioned in page 7.

Use

- Before use, inspect the structure of the gantry and lifting components.
- The material cannot be the subject of any other use than the gantry.
- The use of the article should be stopped without delay if a fault is detected.
- Never lift a load exceeding the maximum operating load indicated on the equipment. (Caution! Shock or accidental catching of the load being handled with environment can generate overloads.)
- No parking or circulate under the gantry or under the suspended load.
- Never let anybody unqualified use the equipment.
- The load cannot be lifted only after being properly controlled and secured.
- Never leave a load hanging.
- Never swing the load intentionnaly
- Do not throw the device or its components, avoid damaging the equipment.
- Never use the equipment to pull away, un-jam or pull sideway.
- Do not adjust the scope or the height of the gantry if the load is still hanging.
- Never use the equiment to transport people.
- Never use equipment that is in poor condition (wear, deformation...).
- Do not cause abrupt movement on the equipment.

Operating environment

Designed to operate in harsh environments with temperatures ranging from -10 to +50 ° C, the gantry FramAlu can be used in marine environment and water treatment plant. For use in particularly difficult context imperatively ask your dealer for advice.
In case of projections of acidic material, it is advisable to wash the equipment and dry with a cloth.

Maintenance

- Replace any suspicious or worn parts.
- Repairs to the gantry must be performed by a qualified technician.
- Set out an inspection program and record all the maintenance work carried out on the equipment.
- The conditions for inspection and maintenance of the gantry must be met to ensure proper operation.
- Never modify the equipment without suitable study and the authorizaton of the manufacturer.
- Use only equipment approved for lifting. Use of any unauthorized accessories may be dangerous.

STARTING

The following instructions are essential for the proper functioning of the device. Failure to follow these instructions may present a danger to the gantry and its user.

Folding/Unfolding

The gantries of HT1 range are foldable for easy storage and their transport. Disassembled and folded the gantries come in three sets: two legs and the beam.

Folding

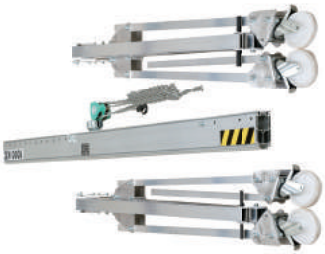

1) Separation of legs assemblies and rail girder.
   Remove the eight bolts M16 making connections between the support plates and rail girder.

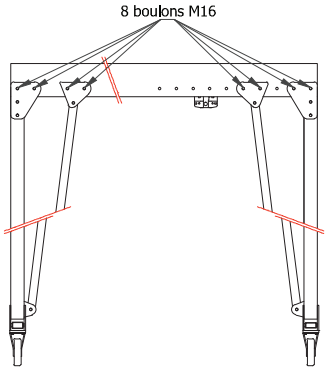

2) Loosening feet.
   Remove the three bolts indicated below

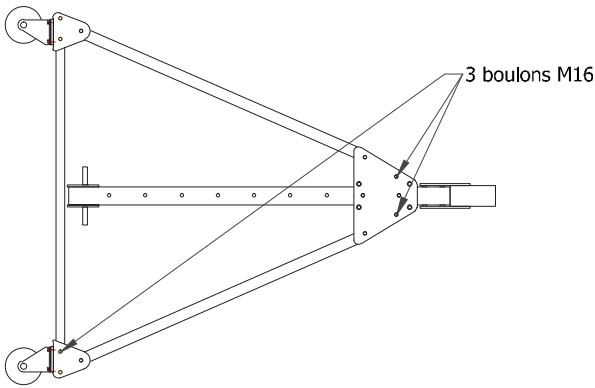

3) Folding of feet
Flip the end carriage and the braces inwards

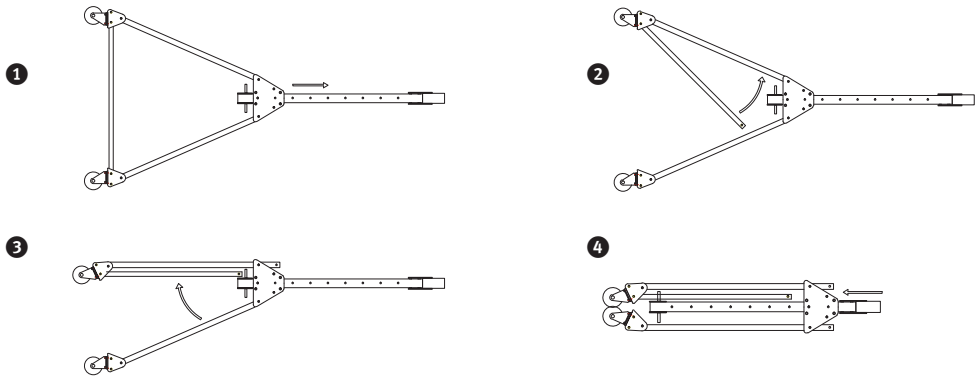

Unfolding

Proceed in reverse order.

- To facilitate assembly, be sure to bolt the braces before the end carriage through the three M16 bolts (2).
- Tighten the eight top bolts (1) until the rail girder is compressed between the brackets and upper plates

Ajdustment of the span

The rail girder presents on one of these ends, holes at regular intervals. They can move one foot on the rail axis and thus reduce the effective span of the gantry.
Simply remove the four bolts and plates hanging brackets, move the foot gantry concerned and put the bolts back while tightening enough to compress the rail girder.

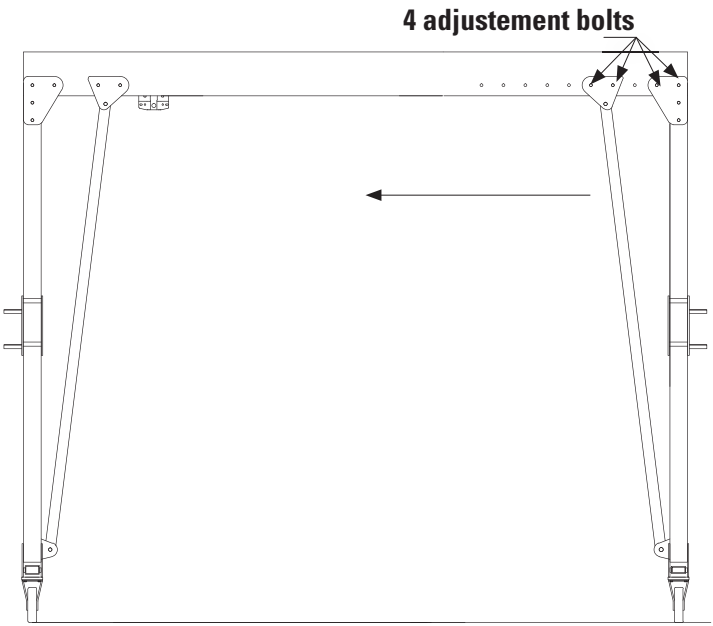

Adjustment of the height

The post slide between central parts and is blocked by two pins.
The handles at the base of the post used for making adjustment.

- Remove the two pins
- Adjust the height of the post due to the handles.
- Lock adjustment by putting the pins.
- Block pins with their respective pin clips.

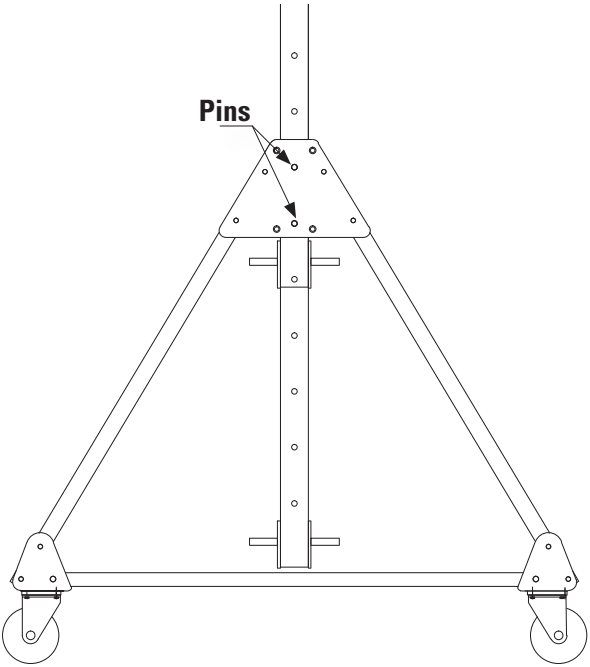

Transport storage

The gantries of range HT1 can be folded as explained above. For others it is not advisable to dismount them, only the feet can be disconnected from the rail girder.
Do not throw the device nor stack material on the folded gantry.

FEEDING LINE

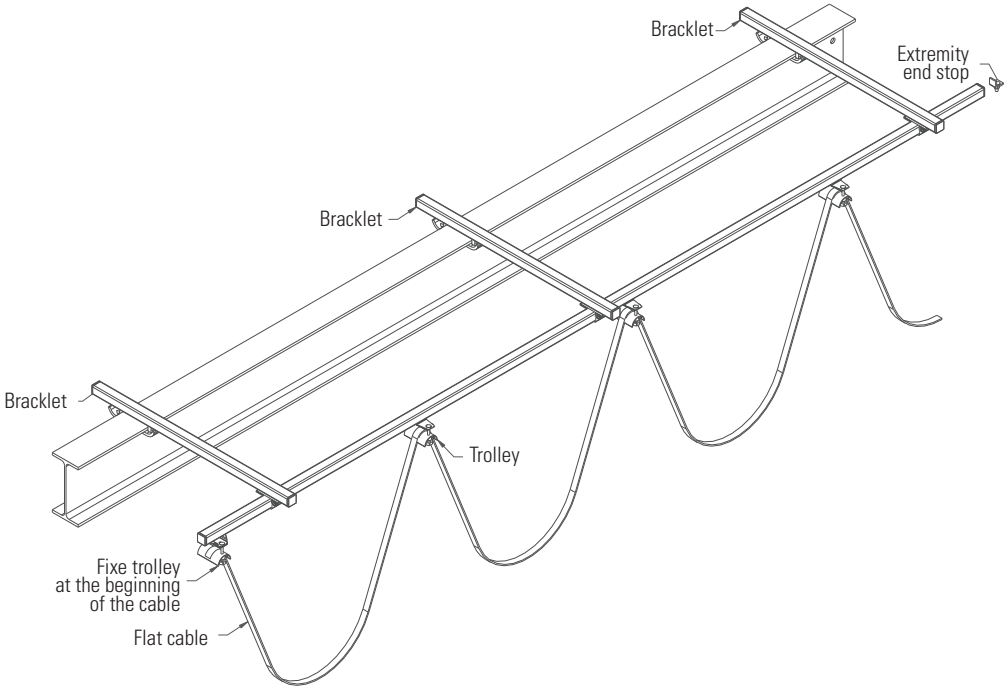

1. Set the 1st bracket according to the position X of the attached drawing.

2. Put the next brackets with a maximum distance of 2m between them.

3. When the brackets are locked, engage the rail of the line in each bracket and fix it.

4. Insert first the fix trolley at the beginning of the line then the mobile trolley and finally the end stop.

5. Put the flat cable through the trolleys distributing them equally along the rail. Let 1m of cable at the end of the rail to plug in the hoist.

SPARE PARTS

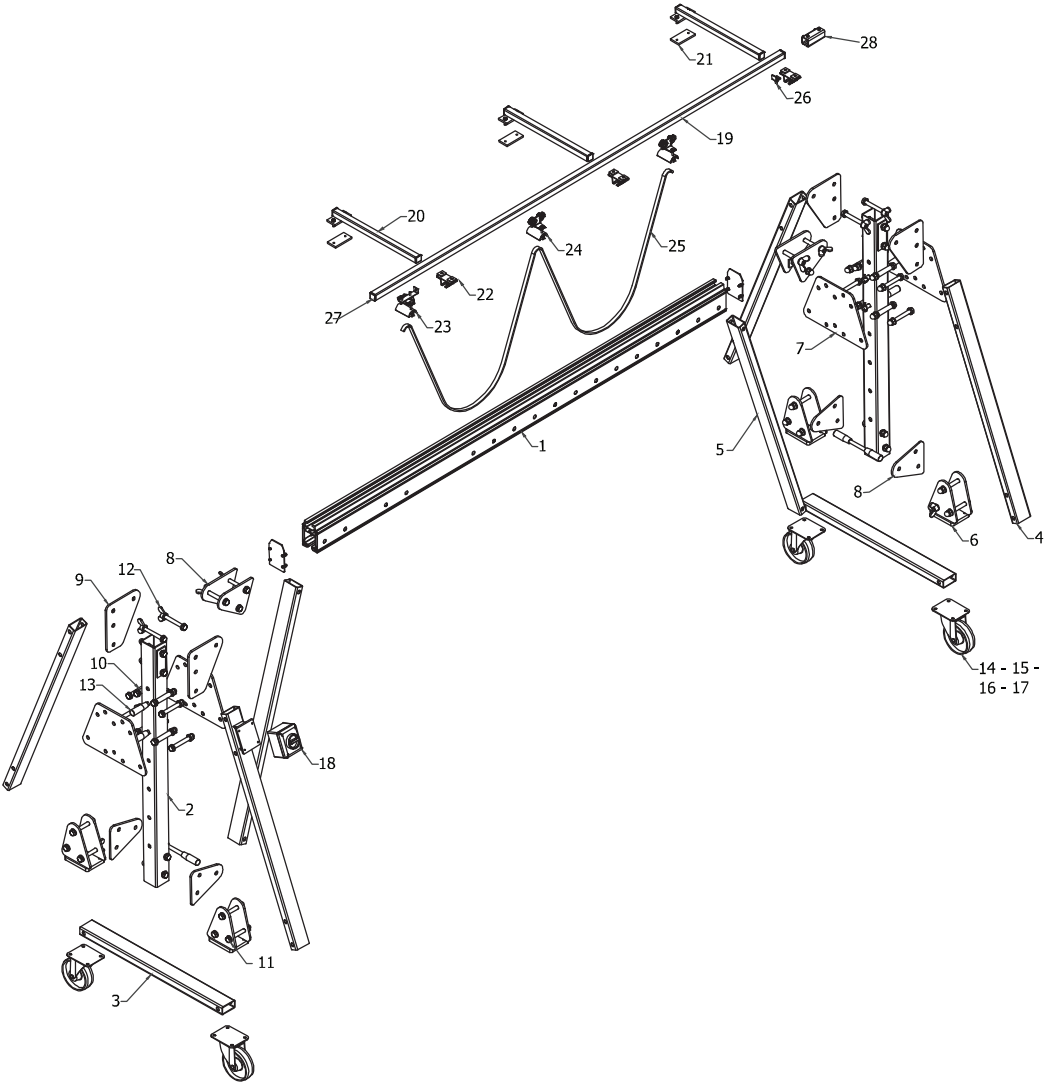

N°	Désignation
1	Profil Aluminium
2	Mât
3	Sommier
4	Montant
5	Bracon
6	Platine de roue (sous ensemble soudé)
7	Pièce centrale
8	Pièce polyvalente
9	Équerre
10	Tube d'écartement
11	Visserie de structure
12	Visserie de poutre
13	Axe de blocage + goupille
14	Roue en polyamide blanc
15	Roue en polyamide blanc à blocage
16	Roue à bandage polyuréthane
17	Roue à bandage polyuréthane à blocage
18	Interrupteur sous boitier
19	Rail de ligne
20	Bras support
21	Plat de fixation taraudé
22	Griffe de suspension
23	Chariot porte câble fixe
24	Chariot porte câble mobile
25	Câble
26	Butée d'extrémité
27	Bouchon plastique
28	Éclisse de jonction

SPECIFICATIONS

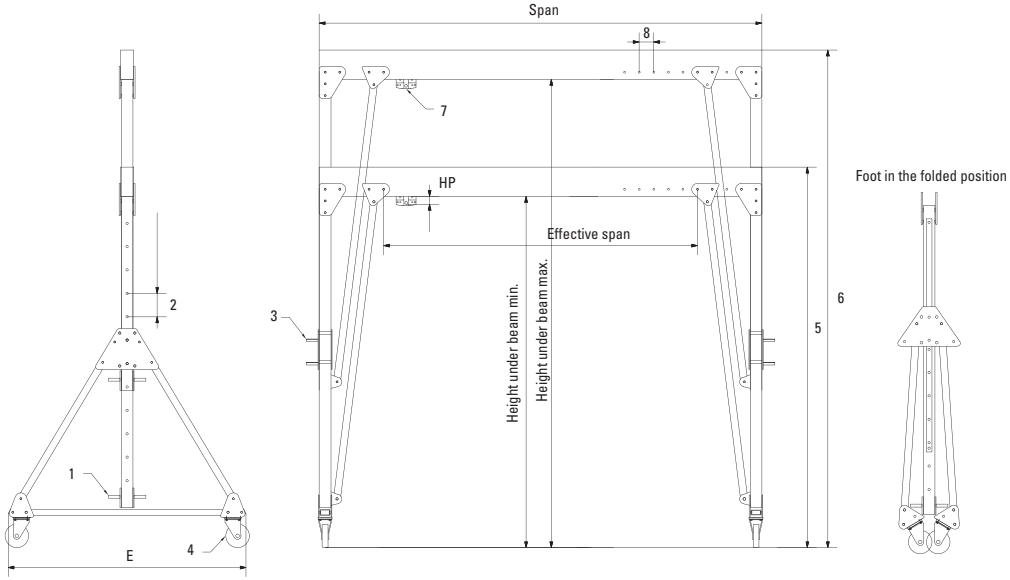

1	Operating handle
2	Pitch = 200
3	Locking pin height
4	Diameter
5	Overall Height min
6	Overall Height maxi
7	Hoist trolley
8	Pitch = 125

CMU Max. capacity Tragähigkeit	Portée (1) Span Ausladung	Portée utile (1) Working span Arbeitsbe-reich	Hauteur Sous Fer mini (2) Height under beam mini Unterkante Ausleger mini	Hauteur Sous Fer maxi (2) Height under beam maxi Unterkante Ausleger maxi	Hauteur totale mini (2) Overall Height mini Bauhöhe mini	Hauteur totale maxi (2) Overall Height maxi Bauhöhe maxi	E	Ø	Poids H0 Weight H0 Gewicht H0	Poids H1 Weight H1 Gewicht H1	Poids H2 Weight H2 Gewicht H2
KG	m	mm	mm	mm	mm	mm	mm	mm	mm	mm	mm
250	2	900	1550 (H0) 2150 (H1) 3000 (H2)	2150 (H0) 3200 (H1) 4000 (H2)	HSF mini + 135 mm	HSF maxi + 135 mm	1100 (H0) 1520 (H1) 2050 (H2)	150	76	84	98
	2,5	1 400							79	87	101
	3	1 900							82	90	104
	3,5	2 400							86	94	108
	4	2 900							89	97	111
	4,5	3 400							92	100	114
	5	3 900							96	104	118
	5,5	4 400							99	107	121
	6	4 900							102	110	124
	6,5	5 400							105	113	127
500	2	900	1550 (H0) 2150 (H1) 3000 (H2)	2150 (H0) 3200 (H1) 4000 (H2)	HSF mini + 135 mm	HSF maxi + 135 mm	1100 (H0) 1520 (H1) 2050 (H2)	150	83	93	109
	2,5	1 400							86	96	112
	3	1 900							89	99	115
	3,5	2 400			HSF mini + 185 mm	HSF maxi + 185 mm			100	110	126
	4	2 900							104	114	130
	4,5	3 400							109	119	135
	5	3 900							113	123	139
	5,5	4 400			HSF mini + 215 mm	HSF maxi + 215 mm			117	127	143
	6	4 900							134	144	160
	6,5	5 400							138	148	164
1 000	2	900	1550 (H0) 2150 (H1) 3000 (H2)	2150 (H0) 3200 (H1) 4000 (H2)	HSF mini + 215 mm	HSF maxi + 215 mm	1100 (H0) 1520 (H1) 2050 (H2)	200	103	106	136
	2,5	1 400							108	111	141
	3	1 900							114	117	147
	3,5	2 400							119	122	152
	4	2 900							124	127	157
	4,5	3 400			HSF mini + 250 mm	HSF maxi + 250 mm			130	133	163
	5	3 900							155	158	188
	5,5	4 400							162	165	195
	6	4 900							169	172	202
	6,5	5 400							176	179	209
1 600	2	900	1550 (H0) 2150 (H1) 3000 (H2)	2150 (H0) 3200 (H1) 4000 (H2)	HSF mini + 215 mm	HSF maxi + 215 mm	1100 (H0) 1520 (H1) 2050 (H2)	200	131	151	171
	2,5	1 400							137	157	177
	3	1 900							142	162	182
	3,5	2 400							161	181	201
	4	2 900			HSF mini + 250 mm	HSF maxi + 250 mm			168	188	208
	4,5	3 400							175	195	215
	5	3 900							183	203	223
2 000	2	900	1550 (H0) 2150 (H1) 3000 (H2)	2150 (H0) 3200 (H1) 4000 (H2)	HSF mini + 215 mm	HSF maxi + 215 mm	1100 (H0) 1520 (H1) 2050 (H2)	200	131	146	171
	2,5	1 400							137	152	177
	3	1 900							154	169	193,5
	3,5	2 400			HSF mini + 250 mm	HSF maxi + 250 mm			161	176	201
	4	2 900							168	183	208

(1) Pied réglable le long de la poutre sur 1 M d'un côté au pas de 125 mm, sauf pour portée 2 M et 2,50 M où le réglage n'est pas disponible.

(2) 3 hauteurs disponibles en standard, H0, H1 et H2.